ALL DIMENSIONS IN MILLIMETRES
REMOVE ALL SHARP EDGES

THIRD ANGLE PROJECTION
DO NOT SCALE DRAWING

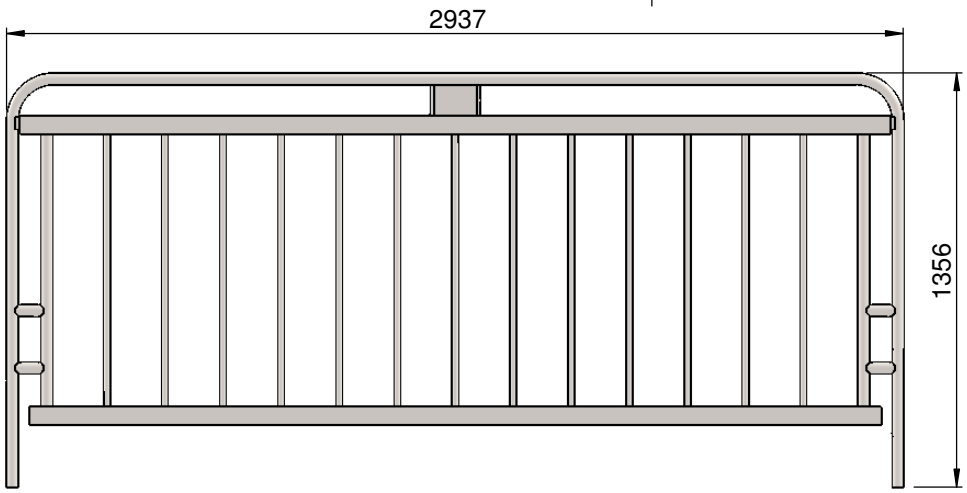

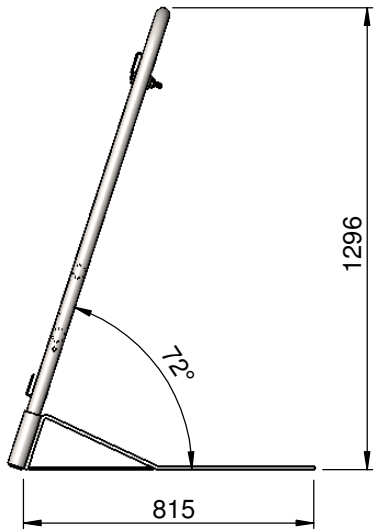

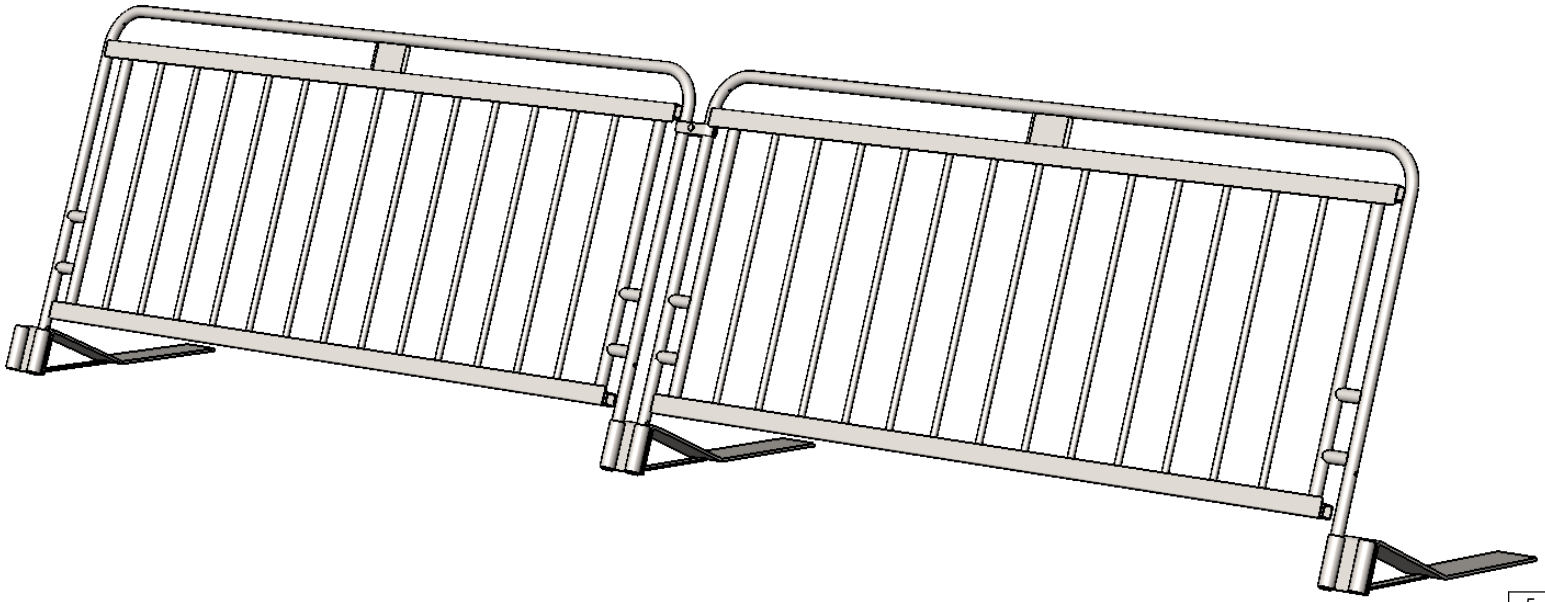

REV	DATE	DESCRIPTION	DRN	CHKD	APPR
5	8/9/25	ISSUED FOR MANUFACTURE	GC	.	.
4	11/6/25	ISSUED FOR MANUFACTURE	GC	.	.

TOLERANCES - UNLESS STATED OTHERWISE		
FABRICATION	UP TO 300mm	+/- 1mm
	UP TO 1000mm	+/- 2mm
	1001mm & ABOVE	+/- 3mm
	ANGULAR	+/- 1 °
MACHINING	+/- 0.2mm	
TUBE GAUGE	T<1.5 = +/- 0.15mm	
	T>1.5 = +/- 0.1T or +/- 0.35mm WHICHEVER IS THE SMALLER	
SHEET GAUGE	+/- 10%	
WEIGHT	+/- 10% (DUE TO MATERIAL PROPERTIES & TOLERANCES)	

TITLE:
CYCLE BARRIER ASSEMBLY

	NAME	SIGNATURE	DATE
DRAWN	G. CRICK		3/7/14
CHK'D	.		.

FINISH: HOT DIPPED GALVANISED

MATERIAL: CARBON STEEL GRADE S235

WEIGHT: 44.5Kg

Events crew

Drw / Stockcode No. 02054231 - GA1

Revision 5

SCALE: 1:15

SHEET 1 OF 15

A3

THE COMPANY RETAIN THE RIGHT TO PERIODICALLY ALTER INFORMATION WITHIN THIS DRAWING SHEET AND WILL ATTEMPT TO NOTIFY ALL PARTIES CONCERNED OF ANY CHANGES AND THE INFORMATION ON THIS SHEET SHOULD NOT BE REPRODUCED WITHOUT THIER WRITTEN CONSENT.